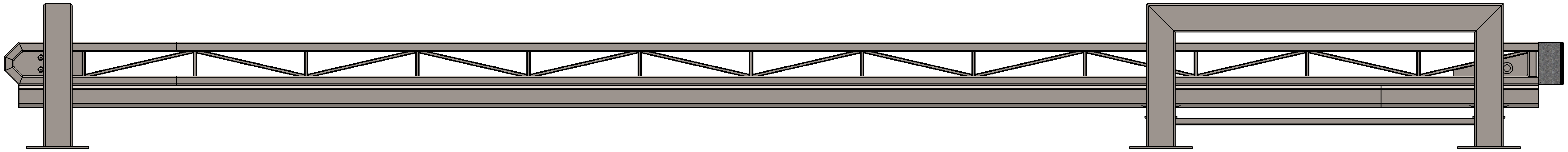

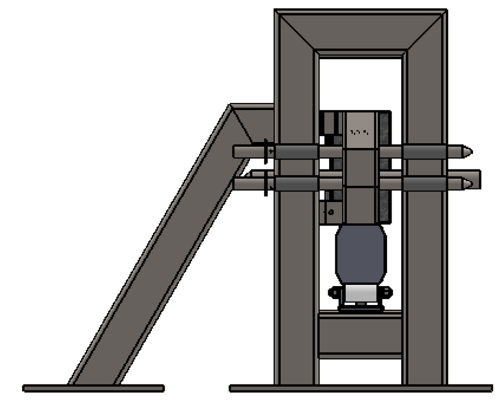

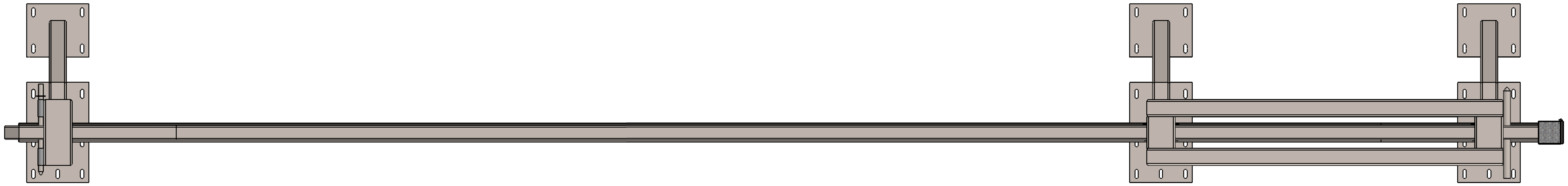

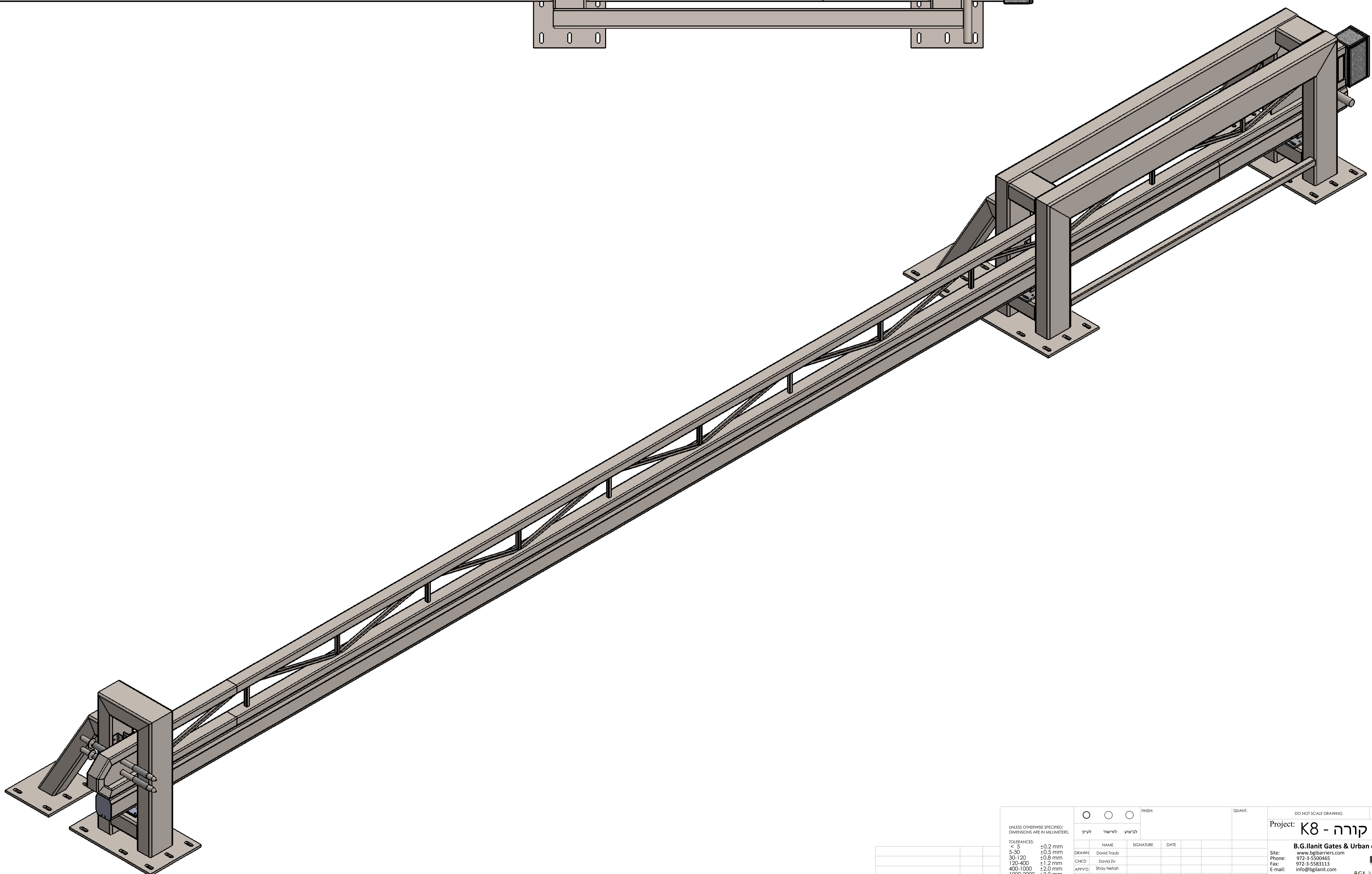

| | | |
|---|---|---|
| | | 00 |
| תאור השינוי | תאריך | מהדורה |

UNLESS OTHERWISE SPECIFIED:
DIMENSIONS ARE IN MILLIMETERS.

TOLERANCES:

| | |
|---|---|
| < 5 | ±0.2 mm |
| 5-30 | ±0.5 mm |
| 30-120 | ±0.8 mm |
| 120-400 | ±1.2 mm |
| 400-1000 | ±2.0 mm |
| 1000-2000 | ±3.0 mm |
| 2000-4000 | ±4.0 mm |
| > 4000 | ±5.0 mm |

ANGULAR: ±0.5°

לעיון לאישור לביצוע

FINISH:

QUANT.

| | NAME | SIGNATURE | DATE |
|---|---|---|---|
| DRAWN | David Traub | | |
| CHK'D | David Ziv | | |
| APPV'D | Shay Netah | | |
| MFG | | | |
| Q.A | | | |

MATERIAL:

WEIGHT:

DO NOT SCALE DRAWING

REVISION

Project: K8 - מחסום קורה

B.G.Ilanit Gates & Urban elements LTD.

Site: www.bgibarriers.com
Phone: 972-3-5500465
Fax: 972-3-5583113
E-mail: info@bgilanit.com

DWG NO.

A0

SCALE:1:50

SHEET 2 OF 2